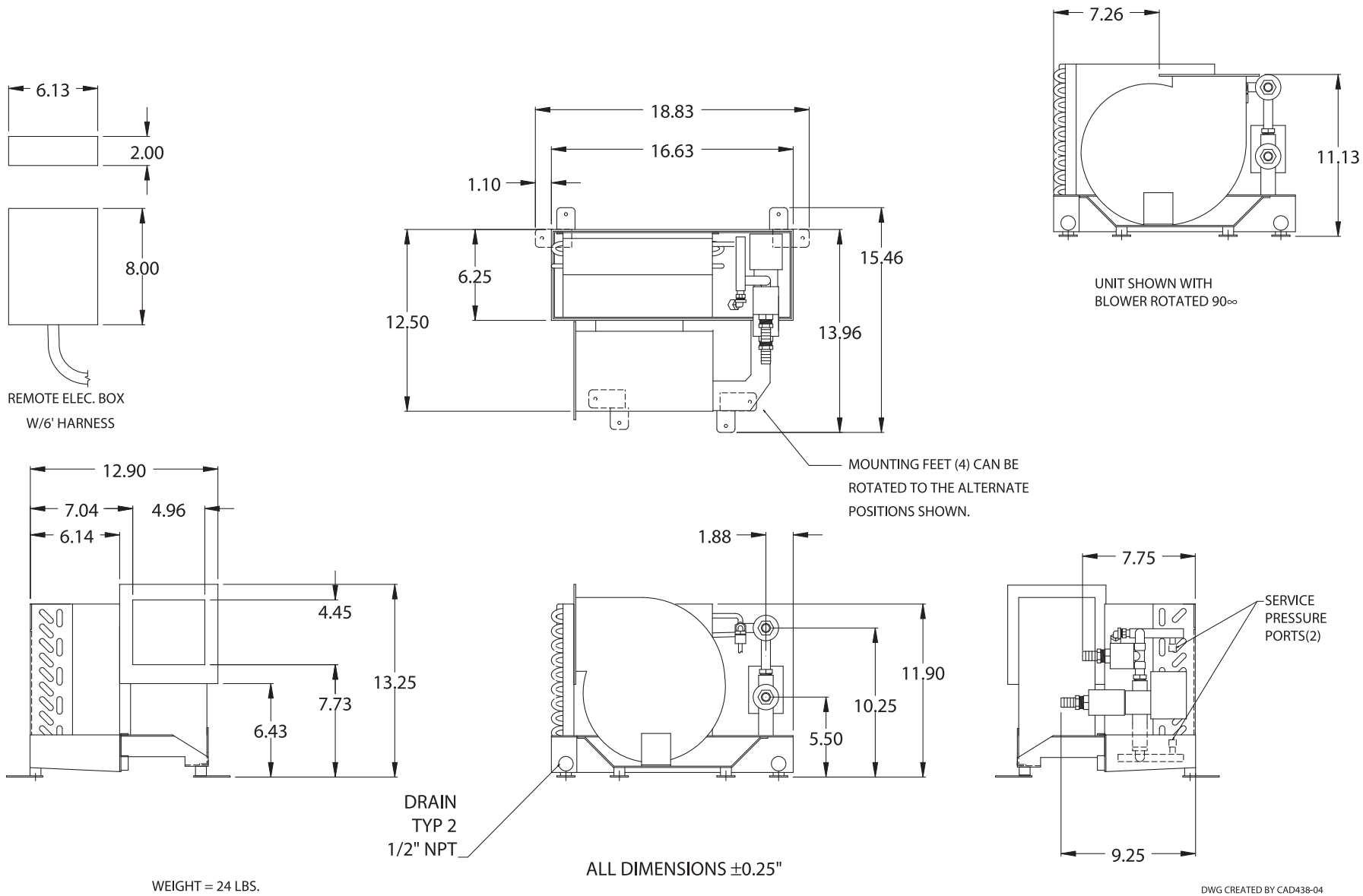


ALL DIMENSIONS ±0.25"

WEIGHT = 24 LBS.

DWG CREATED BY CAD438-04

| REV | DATE | REVISION DESCRIPTION | DWG | APR |
|---|---|---|---|---|
| A | 8/10/04 | REVISED TITLE FROM AT9FZ,CAD548-04 | DRR | JES |
| B | 8/17/04 | RELOCATED BLOWER,REVISED TITLE,CAD560-04 | DRR | JES |
| C | 1/27/05 | REMOVED MARINE AIR,CAD082-05 | DRR | JES |
| D | 2/11/05 | REVISED HEIGHT DIMENSION,CAD106-05 | DRR | JES |

Dometic Corporation

AT9HV
AIR HANDLER

| | | | | | |
|---|---|---|---|---|---|
| DATE: 6/29/04 | DWG BY: DRR | PART NUMBER: TBD | DWG | H3020096 | REV D |
| SCALE: 1:8 | APR BY: JES | | | | |